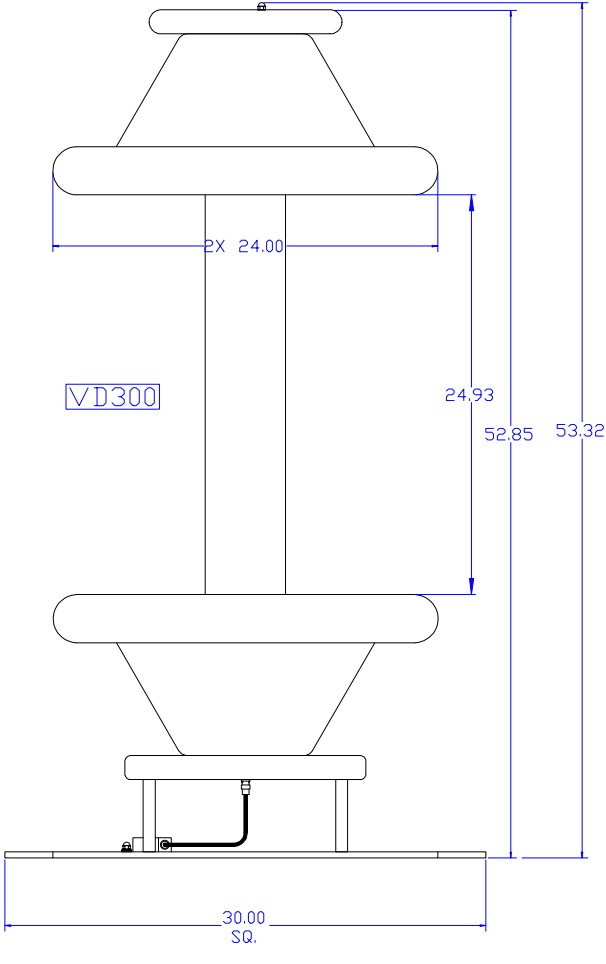
2X 24.00
VD300
24.93
52.85
53.32
30.00
SQ.