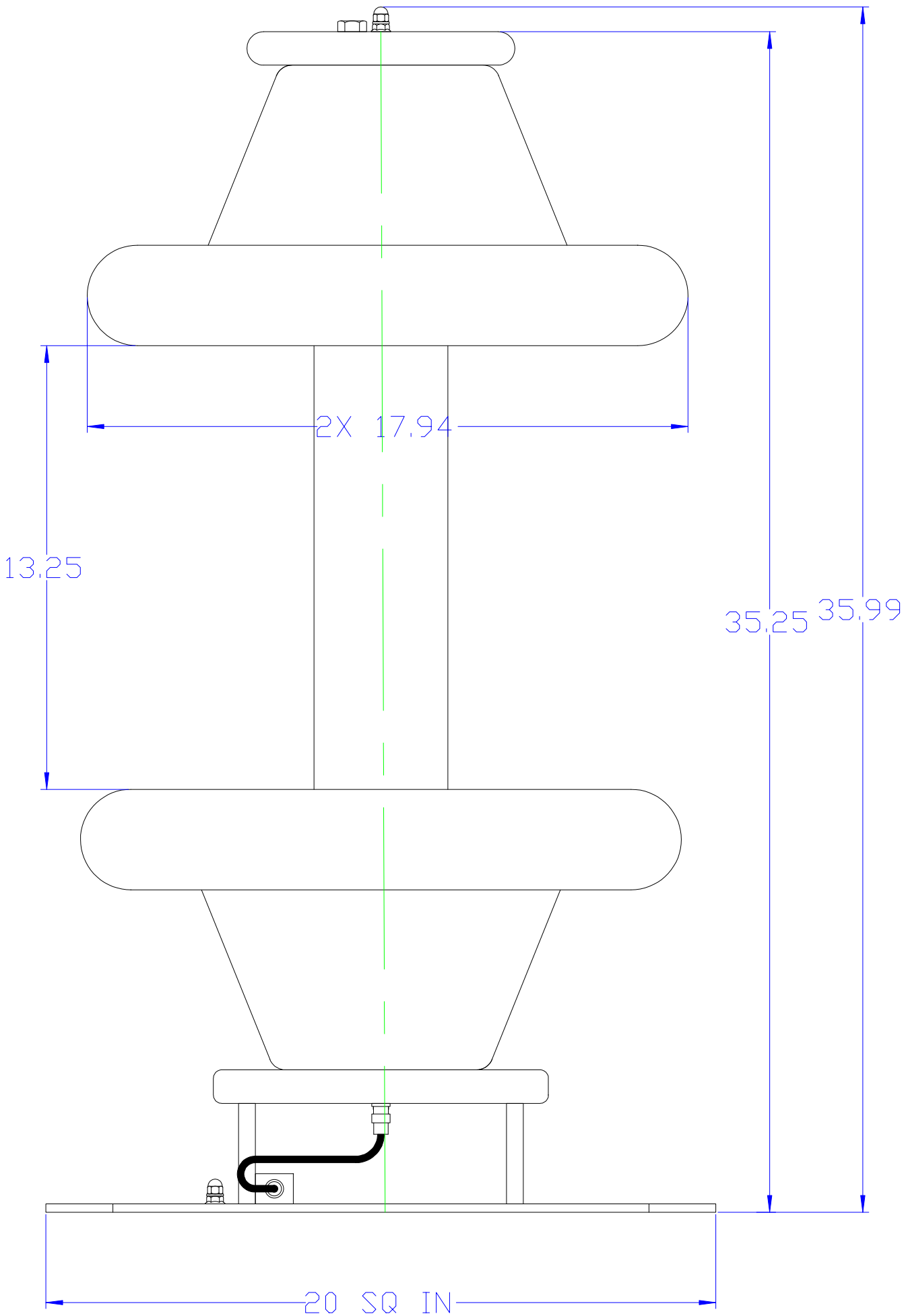
2X 17.94
13.25
35.25
35.99
20 SQ IN